Product data sheet
Characteristics

ATV630D55M3
Variable speed drive, Altivar Process ATV600, ATV630, 55kW/75 hp, 200...240 V, IP00

Green Premium

Product availability: Stock - Normally stocked in distribution facility

Price*: 8983.00 USD

Main

Range of product	Altivar Process ATV600
Product or component type	Variable speed drive
Product specific application	Process and utilities
Device short name	ATV630
Variant	Standard version
Product destination	Synchronous motors Asynchronous motors
EMC filter	Without EMC filter
IP degree of protection	IP00IEC 61800-5-1 IP00IEC 60529 IP21 with kit VW3A9704)IEC 61800-5-1 IP21 with kit VW3A9704)IEC 60529
Type of cooling	Forced convection
Supply frequency	50...60 Hz - 5...5 %
[Us] rated supply voltage	200...240 V - 15...10 %
Motor power kW	55 KW normal duty) 45 KW heavy duty)
Maximum Horse Power Rating	75 Hp normal duty 60 Hp heavy duty
Line current	189 A 200 V normal duty) 161 A 240 V normal duty) 156 A 200 V heavy duty) 134 A 240 V heavy duty)
Prospective line Isc	50 KA
Apparent power	61.1 KVA 240 V normal duty) 50 KVA 240 V heavy duty)
Continuous output current	211 A 2.5 kHz normal duty 176 A 2.5 kHz heavy duty
Maximum transient current	232.1 A 60 s normal duty) 264 A 60 s heavy duty)
Asynchronous motor control profile	Variable torque standard Optimized torque mode Constant torque standard

The information provided in this documentation contains general descriptions and/or technical characteristics of the performance of the products contained herein.
This documentation is not intended as a substitute for and is not to be used for determining suitability or reliability of these products for specific user applications.
It is the duty of any such user or integrator to perform the appropriate and complete risk analysis, evaluation and testing of the products with respect to the relevant specific application or use thereof.
Neither Schneider Electric Industries SAS nor any of its affiliates or subsidiaries shall be responsible or liable for misuse of the information contained herein. *Prices are indicative

Synchronous motor control profile	Permanent magnet motor Synchronous reluctance motor
Output frequency	0.0001…0.5 KHz
Speed drive output frequency	0.1…599 Hz
Nominal switching frequency	2.5 kHz
Switching frequency	2.5...8 kHz with derating factor 2...8 kHz adjustable
Safety function	STO (safe torque off) SIL 3
Discrete input logic	16 preset speeds
Communication port protocol	Modbus TCP Ethernet Modbus serial
Option card	Slot A: communication module, Profibus DP V1 Slot A: communication module, Profinet Slot A: communication module, DeviceNet Slot A: communication module, Modbus TCP/EtherNet/IP Slot A: communication module, CANopen daisy chain RJ45 Slot A: communication module, CANopen SUB-D 9 Slot A: communication module, CANopen screw terminals Slot A/slot B: digital and analog I/O extension module Slot A/slot B: output relay extension module Slot A: communication module, Ethernet IP/Modbus TCP/MD-Link Communication module, BACnet MS/TP Communication module, Ethernet Powerlink

Complementary

Mounting mode	Wall mount
Output voltage	<= power supply voltage
Permissible temporary current boost	1.1 x In during 60 s (normal duty) 1.5 x In during 60 s (heavy duty)
Motor slip compensation	Not available in permanent magnet motor law Automatic whatever the load Adjustable Can be suppressed
Acceleration and deceleration ramps	Linear adjustable separately from 0.01...9999 s
Braking to standstill	By DC injection
Protection type	Thermal protection: motor Safe torque off: motor Motor phase break: motor Thermal protection: drive Safe torque off: drive Overheating: drive Overcurrent between output phases and earth: drive Overload of output voltage: drive Short-circuit protection: drive Motor phase break: drive Overvoltages on the DC bus: drive Line supply overvoltage: drive Line supply undervoltage: drive Line supply phase loss: drive Overspeed: drive Break on the control circuit: drive
Frequency resolution	Display unit: 0.1 Hz Analog input: 0.012/50 Hz
Electrical connection	Control: removable screw terminals 0.5...1.5 mm²/AWG 20...AWG 16 Line side screw terminal 2 x 70...3 x 120 mm² 2 x AWG 2/0...2 x 300 kcmil Motor screw terminal 2 x 70...3 x 120 mm² 2 x AWG 2/0...2 x 300 kcmil
Connector type	RJ45 (on the remote graphic terminal) for Ethernet/Modbus TCP RJ45 (on the remote graphic terminal) for Modbus serial
Exchange mode	Half duplex, full duplex, autonegotiation Ethernet/Modbus TCP
Number of addresses	1…247 Modbus serial
Method of access	Slave Modbus TCP

Supply	External supply for digital inputs 24 V DC 19…30 V), <1.25 mA overload and short-circuit protection Internal supply for reference potentiometer (1 to 10 kOhm): 10.5 V DC +/- 5 %, <10 mA, protection type: overload and short-circuit protection Internal supply for digital inputs and STO 24 V DC 21…27 V), <200 mA overload and short-circuit protection
Local signalling	3 LEDs for local diagnostic 3 LEDs (dual colour) for embedded communication status 4 LEDs (dual colour) for communication module status 1 LED (red) for presence of voltage
Width	12.60 In (320 mm)
Height	33.54 In (852 mm)
Depth	15.35 In (390 mm)
Net Weight	185.19 Lb(US) (84 kg)
Analogue input number	3
Analogue input type	AI1, AI2, AI3 software-configurable voltage: 0...10 V DC, impedance: 30 kOhm, resolution 12 bits AI1, AI2, AI3 software-configurable current: 0...20 mA/4...20 mA, impedance: 250 Ohm, resolution 12 bits
Discrete input number	8
Discrete input type	DI1...DI6 programmable, 24 V DC (<= 30 V), impedance: 3.5 kOhm DI5, DI6 programmable as pulse input 0…30 kHz, 24 V DC <= 30 V) STOA, STOB safe torque off, 24 V DC (<= 30 V), impedance: > 2.2 kOhm
Input compatibility	DI1...DI6: discrete input level 1 PLC conforming to EN/IEC 61131-2 DI5, DI6: discrete input level 1 PLC conforming to IEC 65A-68 STOA, STOB: discrete input level 1 PLC conforming to EN/IEC 61131-2
Discrete input logic	Positive logic (source) (DI1...DI6), < 5 V (state 0), > 11 V (state 1) Negative logic (sink) (DI1...DI6), > 16 V (state 0), < 10 V (state 1) Positive logic (source) (DI5, DI6), < 0.6 V (state 0), > 2.5 V (state 1) Positive logic (source) (STOA, STOB), < 5 V (state 0), > 11 V (state 1)
Analogue output number	2
Analogue output type	Software-configurable voltage AO1, AO2 0...10 V DC 470 Ohm 10 bits Software-configurable current AO1, AO2: 0...20 mA, resolution 10 bits
Sampling duration	2 Ms +/- 0.5 ms DI1...DI4) - discrete input 5 Ms +/- 1 ms DI5, DI6) - discrete input 5 Ms +/- 0.1 ms AI1, AI2, AI3) - analog input 10 Ms +/- 1 ms AO1) - analog output
Accuracy	+/- 0.6 % AI1, AI2, AI3 for a temperature variation 60 °C analog input +/- 1 % AO1, AO2 for a temperature variation 60 °C analog output
Linearity error	AI1, AI2, AI3: +/- 0.15 % of maximum value for analog input AO1, AO2: +/- 0.2 % for analog output
Relay output number	3
Relay output type	Configurable relay logic R1 fault relay NO/NC 100000 cycles Configurable relay logic R2 sequence relay NO 100000 cycles Configurable relay logic R3 sequence relay NO 100000 cycles
Refresh time	Relay output (R1, R2, R3): 5 ms (+/- 0.5 ms)
Minimum switching current	Relay output R1, R2, R3 5 mA 24 V DC
Maximum switching current	Relay output R1, R2, R3 resistive, cos phi = 1 3 A 250 V AC Relay output R1, R2, R3 resistive, cos phi = 1 3 A 30 V DC Relay output R1, R2, R3 inductive, cos phi = 0.4 7 ms 2 A 250 V AC Relay output R1, R2, R3 inductive, cos phi = 0.4 7 ms 2 A 30 V DC
Isolation	Between power and control terminals

Discrete and process manufacturing	Compressor centrifugal Building - HVAC Other application Food and beverage processing Fan Mining mineral and metal Pump Mining mineral and metal Fan Oil and gas Other application Water and waste water Screw compressor Building - HVAC Pump Food and beverage processing Fan Food and beverage processing Atomization Food and beverage processing Electro submersible pump (ESP) Oil and gas Water injection pump Oil and gas Jet fuel pump Oil and gas Compressor for refinery Oil and gas Centrifuge pump Water and waste water Positive displacement pump Water and waste water Electro submersible pump (ESP) Water and waste water Screw pump Water and waste water Lobe compressor Water and waste water Screw compressor Water and waste water Compressor centrifugal Water and waste water Fan Water and waste water Conveyor Water and waste water Mixer Water and waste water
Power range	55…100 KW 200…240 V 3 phase

Environment

Insulation resistance	> 1 MOhm 500 V DC for 1 minute to earth
Noise level	69.9 DB 86/188/EEC
Volume of cooling air	158506.07 Gal/Hr(US) (600 m3/h)
Operating position	Vertical +/- 10 degree
Maximum THDI	<48 % full load conforming to IEC 61000-3-12
Electromagnetic compatibility	Electrostatic discharge immunity test level 3 conforming to IEC 61000-4-2 Radiated radio-frequency electromagnetic field immunity test level 3 conforming-to IEC 61000-4-3 Electrical fast transient/burst immunity test level 4 conforming to IEC 61000-4-4 1.2/50 µs - 8/20 µs surge immunity test level 3 conforming to IEC 61000-4-5 Conducted radio-frequency immunity test level 3 conforming to IEC 61000-4-6
Pollution degree	2 conforming to EN/IEC 61800-5-1
Vibration resistance	1.5 mm peak to peak 2…13 Hz)IEC 60068-2-6 1 gn 13…200 Hz)IEC 60068-2-6
Shock resistance	15 gn 11 ms IEC 60068-2-27
Relative humidity	5…95 % without condensation IEC 60068-2-3
Ambient air temperature for operation	5…122 °F (-15…50 °C) without derating) 122…140 °F (50…60 °C) with derating factor)
Ambient air temperature for storage	-40…158 °F (-40…70 °C)
Operating altitude	<= 1000 m without derating 1000...4800 m with current derating 1 % per 100 m
Standards	UL 508C EN/IEC 61800-3 Environment 1 category C2 EN/IEC 61800-3 Environment 2 category C3 EN/IEC 61800-3 EN/IEC 61800-5-1 IEC 61000-3-12 IEC 60721-3 IEC 61508 IEC 13849-1
Product certifications	UL ATEX INERIS TÜV DNV-GL CSA ATEX zone 2/22
Marking	CE

Ordering and shipping details

Category	22207 - ATV630 FRAMES 5 & 6
Discount Schedule	CP4E
GTIN	03606480701542
Nbr. of units in pkg.	1
Package weight(Lbs)	187.39 Lb(US) (85 kg)
Returnability	Yes
Country of origin	IN

Packing Units

Unit Type of Package 1	PCE
Package 1 Height	25.59 In (65 cm)
Package 1 width	18.50 In (47 cm)
Package 1 Length	40.55 In (103 cm)

Offer Sustainability

Sustainable offer status	Green Premium product
California proposition 65	WARNING: This product can expose you to chemicals including: Lead and lead compounds, which is known to the State of California to cause cancer and birth defects or other reproductive harm. For more information go to www.P65Warnings.ca.gov
REACh Regulation	REACh Declaration
EU RoHS Directive	Pro-active compliance (Product out of EU RoHS legal scope) EU RoHS Declaration
Mercury free	Yes
RoHS exemption information	Yes
China RoHS Regulation	China RoHS Declaration
WEEE	The product must be disposed on European Union markets following specific waste collection and never end up in rubbish bins.
Upgradeability	Upgraded Components Available

Dimensions

Drives with IP21 Top Cover

Right and Front Views

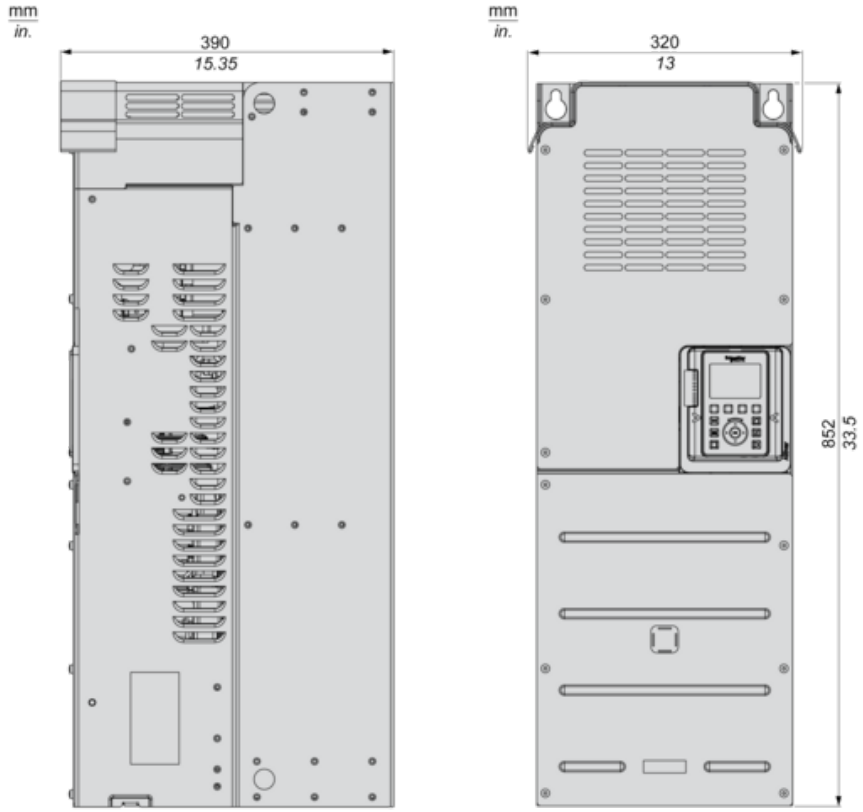

Drives Without IP21 Top Cover

Right and Front Views

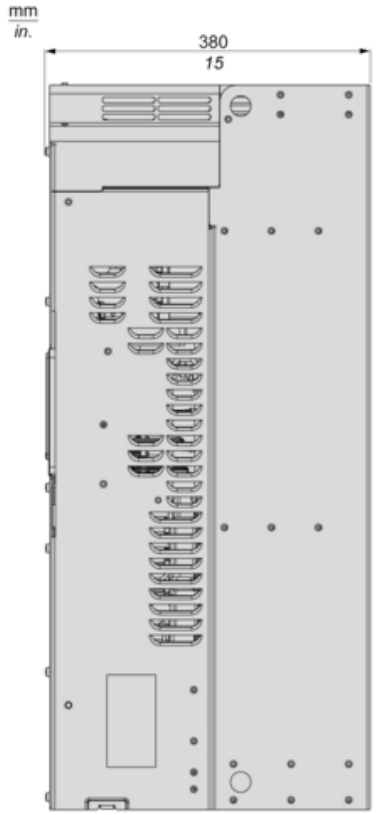

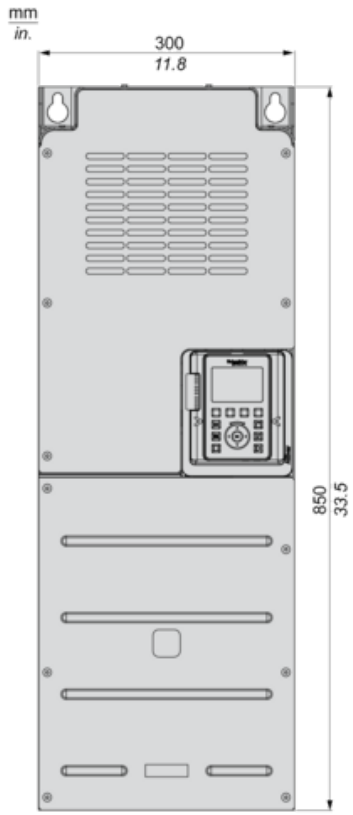

Drives with Lower Conduit Box Sold Separately

Rear, Front and Left Views

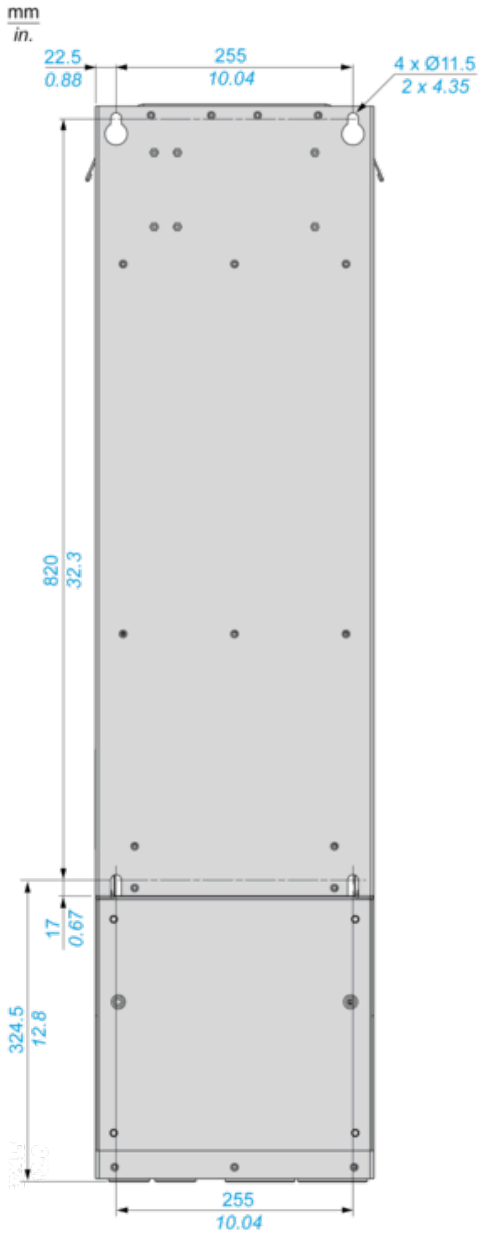
mm
in.
22.5
0.88
255
10.04
4 x Ø11.5
2 x 4.35
820
32.3
17
0.67
324.5
12.8
255
10.04

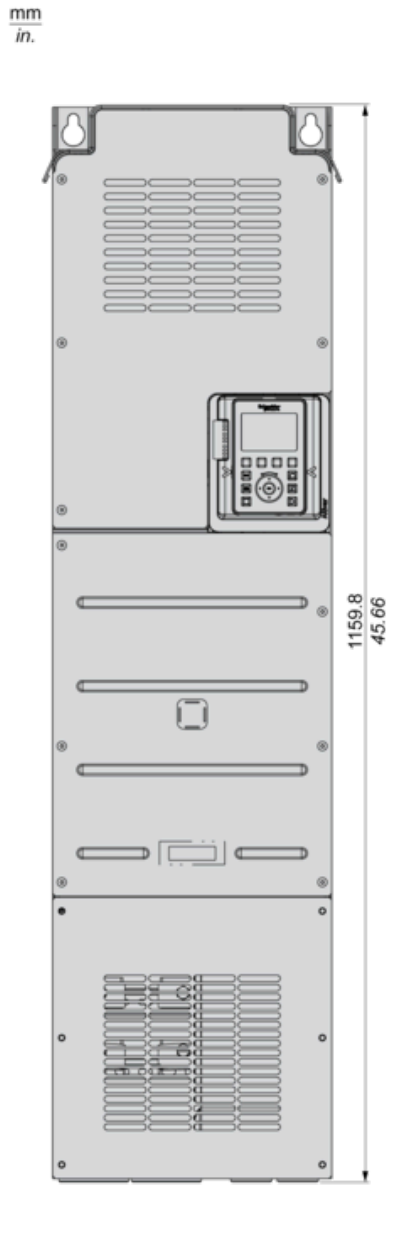
mm
in.
1159.8
45.66

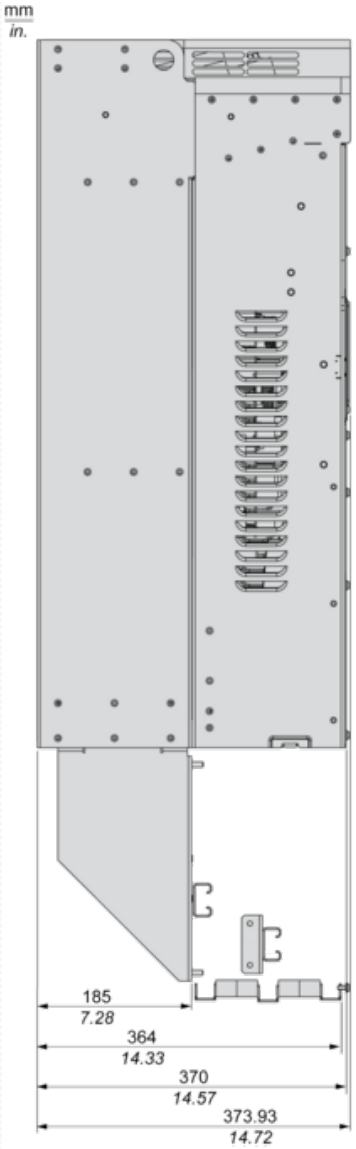
mm
in.
185
7.28
364
14.33
370
14.57
373.93
14.72

ATV630D55M3

Clearances

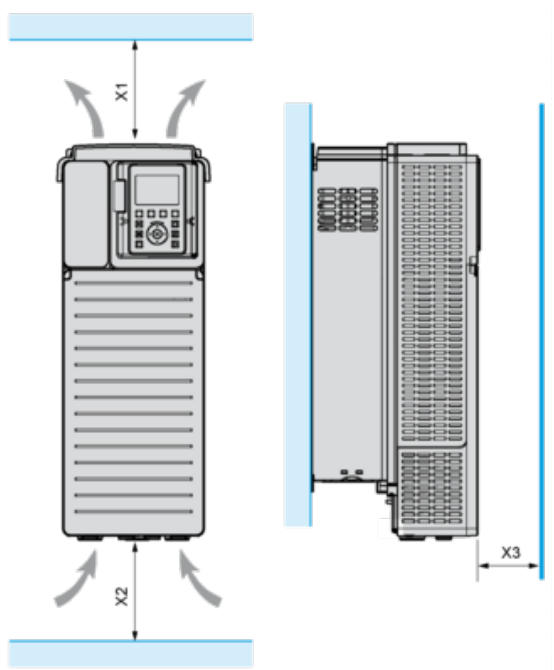

X1	X2	X3
≥ 250 mm (10 in.)	≥ 250 mm (10 in.)	≥ 100 mm (3.94 in.)

Mounting Types

Mounting Type A: Individual IP21

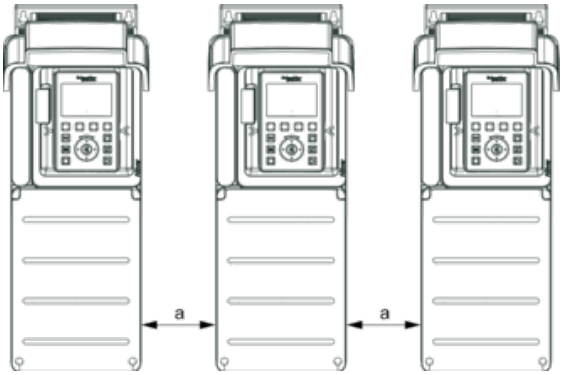

a ≥ = 110 mm (4.33 in.)

Mounting Type B: Side by Side IP20 , Only possible at ambient temperature lower than 40 °C (104 °F)

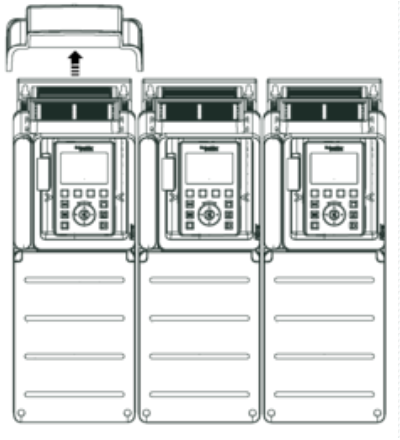

Mounting Type C: Individual IP20

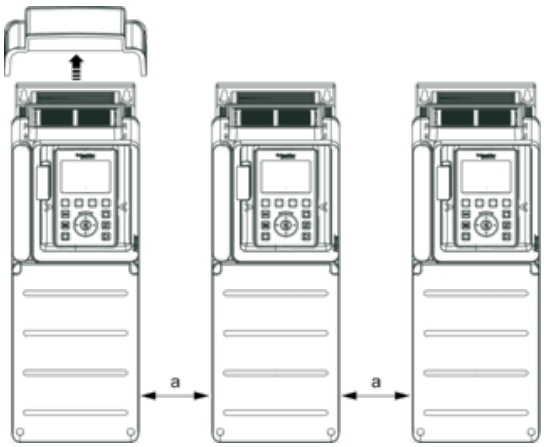

a ≥ = 110 mm (4.33 in.)

Three-Phase Power Supply with Upstream Breaking via Line Contactor

Connection diagrams conforming to standards EN 954-1 category 1 and IEC/EN 61508 capacity SIL1, stopping category 0 in accordance with standard IEC/EN 60204-1

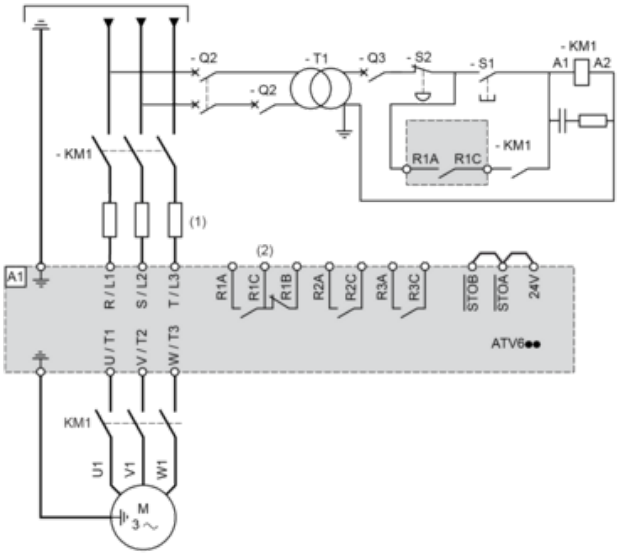

(1) Line choke if used

(2) Use relay R1 set to operating state Fault to switch Off the product once an error is detected.

A1 : Drive

KM1 : Line Contactor

Q2, Q3 : Circuit breakers

S1, S2 : Pushbuttons

T1 : Transformer for control part

Three-Phase Power Supply with Downstream Breaking via Contactor

Connection diagrams conforming to standards EN 954-1 category 1 and IEC/EN 61508 capacity SIL1, stopping category 0 in accordance with standard IEC/EN 60204-1

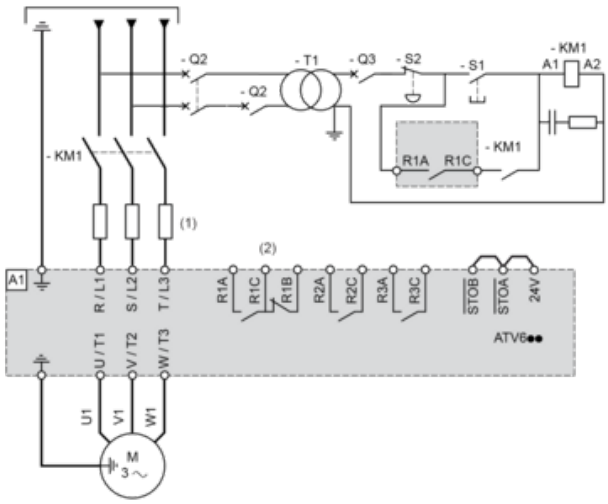

(1) Line choke if used

(2) Use relay R1 set to operating state Fault to switch Off the product once an error is detected.

A1 : Drive

KM1 : Contactor

Control Block Wiring Diagram

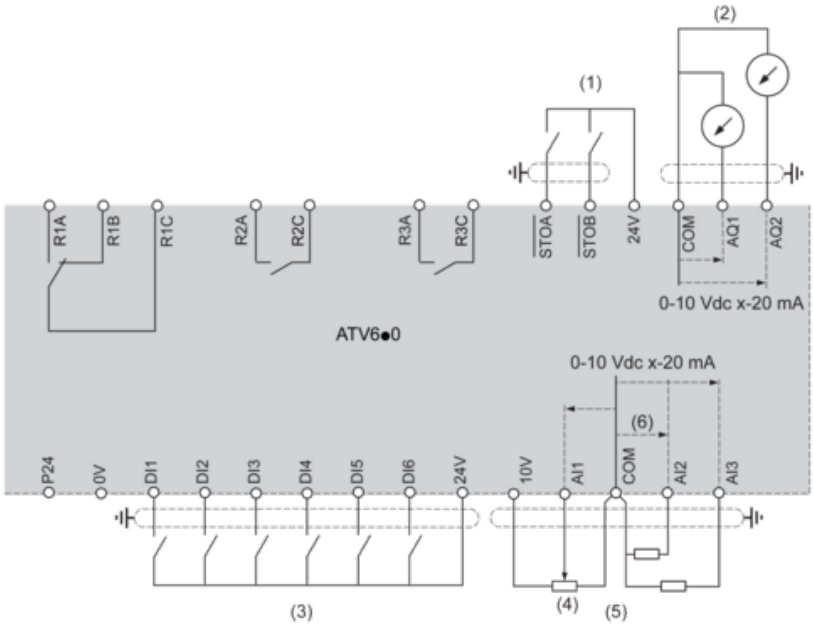

(1) Safe Torque Off

(2) Analog Output

(3) Digital Input

(4) Reference potentiometer

(5) Analog Input

R1A, R1B, R1C : Fault relay

R2A, R2C : Sequence relay

R3A, R3C : Sequence relay

Sensor Connection

It is possible to connect either 1 or 3 sensors on terminals AI2 or AI3.

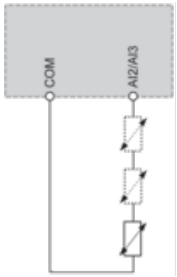

Sink / Source Switch Configuration

The switch is used to adapt the operation of the logic inputs to the technology of the programmable controller outputs.

- Set the switch to Source (factory setting) if using PLC outputs with PNP transistors.
- Set the switch to Ext if using PLC outputs with NPN transistors.

Switch Set to SRC (Source) Position Using the Output Power Supply for the Digital Inputs

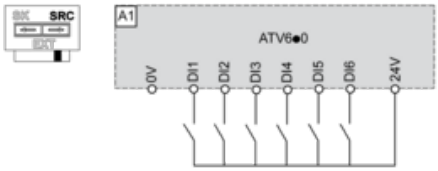

Switch Set to SRC (Source) Position and Use of an External Power Supply for the DIs

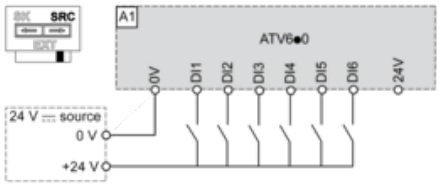

Switch Set to SK (Sink) Position Using the Output Power Supply for the Digital Inputs

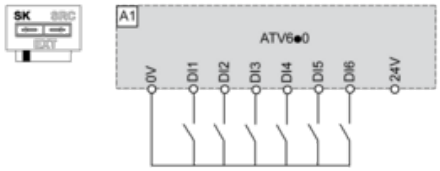

Switch Set to EXT Position Using an External Power Supply for the DIs

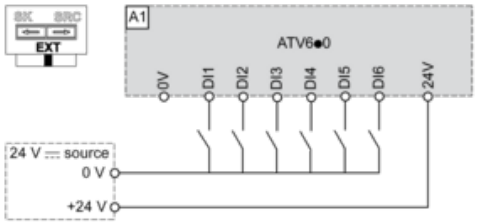

ATV630D55M3

Derating Curves

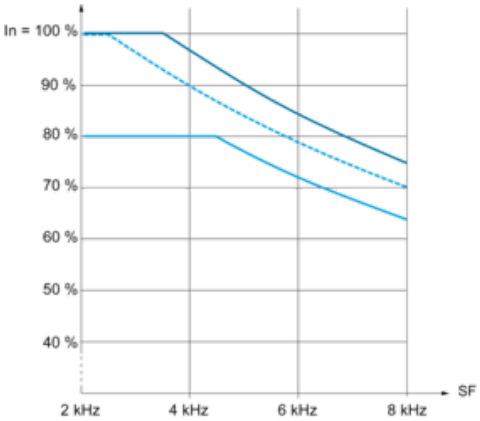

40 °C (104 °F) - Mounting type A, B and C
50 °C (122 °F) - Mounting type A and C
60 °C (140 °F) - Mounting type C
In : Nominal Drive Current
SF : Switching Frequency

Product Life Status :	Commercialised